www.JetPackAcademy.com

LM386 audio amplifier circuits

Bullhorn/P.A.

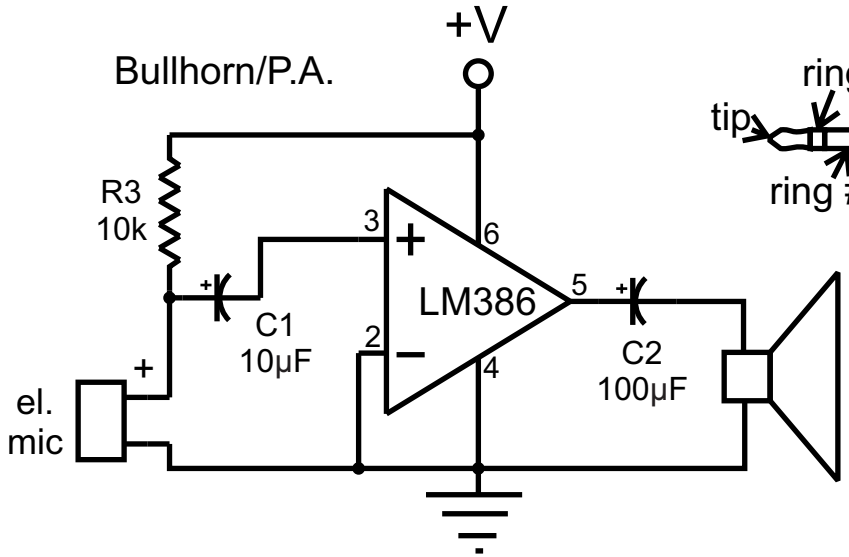

ipod/MP3 player amp
(mono)

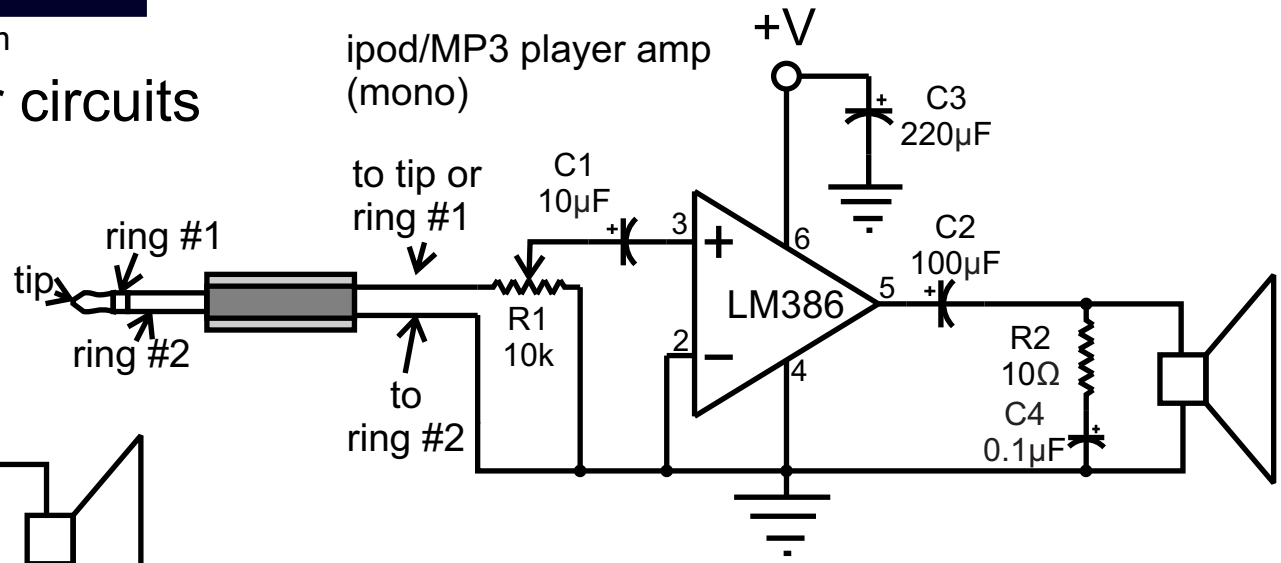

Electric guitar amp
with optional distortion
S1 when switched on
sets gain to 200

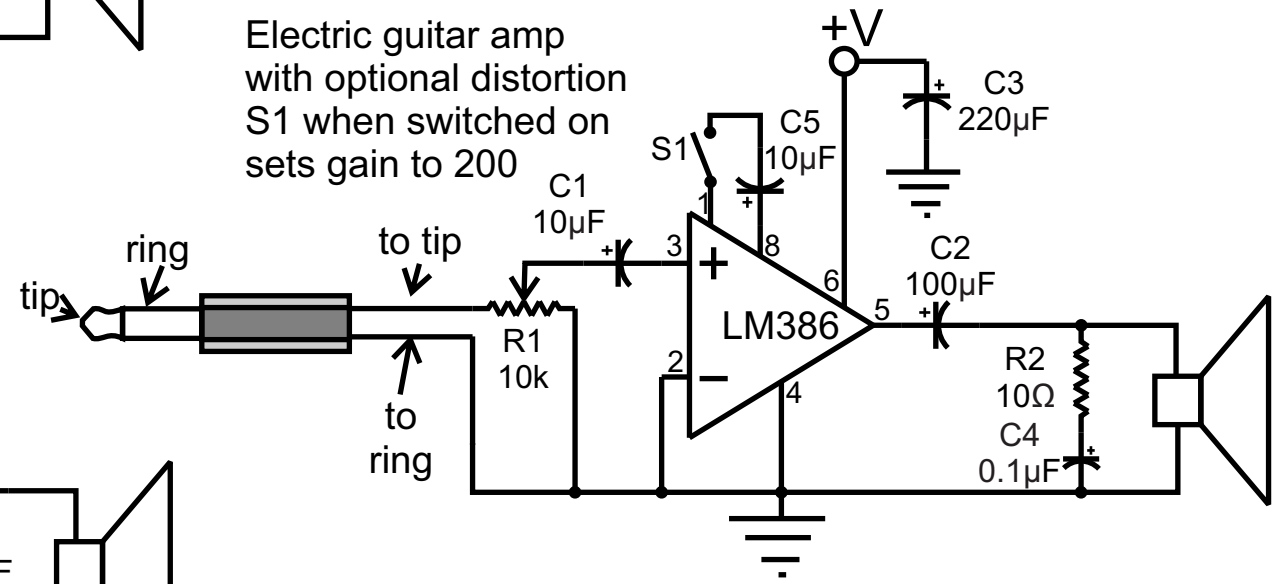
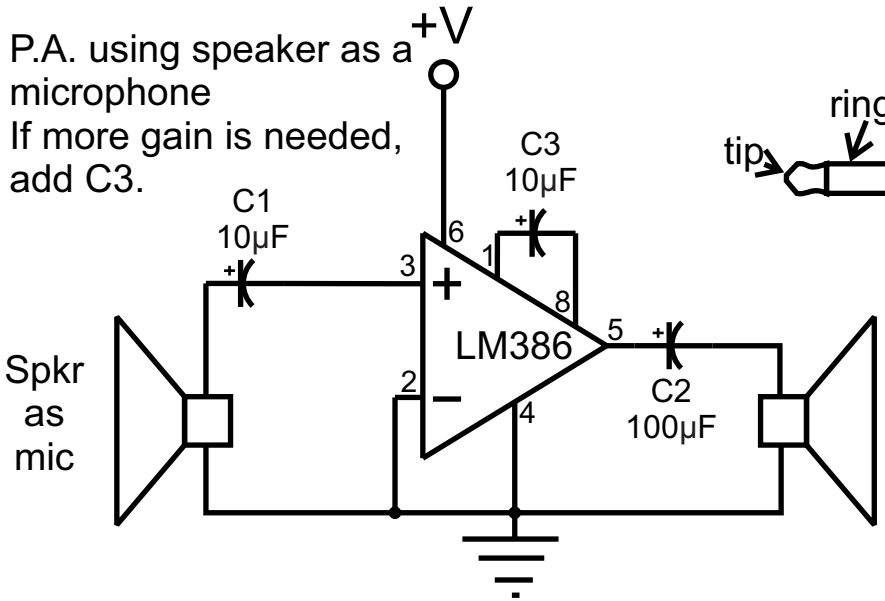
P.A. using speaker as a
microphone
If more gain is needed,
add C3.